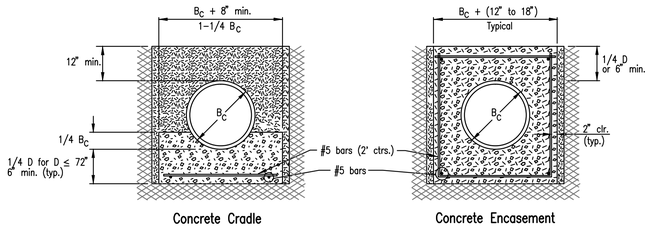

CLASS A

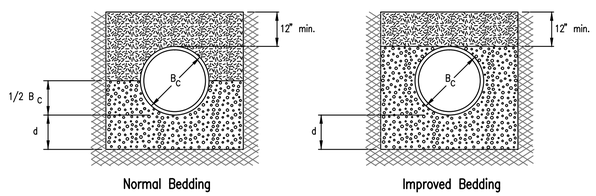

CLASS B

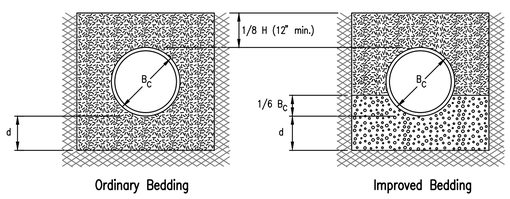

CLASS C

PIPE ZONE BACKFILLING

B_C = Outside Pipe Diameter

H = Backfill from Top of Pipe to Existing Ground

D = Inside Pipe Diameter

d = Depth of Bedding Material Below Pipe

= Granular Bedding Material or Sand-Gravel Bedding

= Compacted Embedment

= Concrete

Depth of Bedding Material Below Pipe		
D	d(min) Soil	d(min) Rock
27" & smaller	4"	6"
30" to 60"	5"	9"
66" & larger	6"	12"

Granular Bedding Material shall be an approved material consisting of durable crushed rock conforming with the requirements of the latest revision of ASTM C-33 Size No. 67 (3/4" to No. 4); to be placed in not more than 6" layers and compacted by slicing with a shovel or vibrating. Soundness, abrasion, and absorption limits shall be as required for coarse aggregates in Section 03010-Concrete Work in the specifications.

Sand-Gravel Bedding Material – sand-gravel mix meeting Type UD-1 of the 1990 Kansas Standard Specifications for State Road and Bridge Construction.

Compacted Embedment shall be an approved sand material free from debris, organic material, and stones with 100% passing the 3/4" sieve to be placed in uniform layers not more than 6" thick and compacted to 95 percent maximum density as determined by ASTM D698. Granular Bedding Material may be substituted for all or part of Compacted Embedment Materials.

Class A "Concrete Cradle" and/or Class A "Concrete Encasement" is not required unless specified on the plans. However, where unexpected trench conditions exist or improper trenching is performed Class A Bedding may be required as determined by the Engineer.

Class B Bedding shall be used for all flexible pipe.

a. Class B Normal Bedding shall be used for PVC Pipe unless wet conditions are encountered.

b. Class B Improved Bedding shall be used for other flexible pipe, and for PVC pipe in wet conditions.

Class C Bedding shall be used for all rigid pipe.

a. Class C Ordinary Bedding shall be used for all rigid pipe unless wet conditions are encountered.

b. Class C Improved Bedding shall be used for wet conditions existing in the trench, as directed by the Engineer, at no additional cost to the Owner. The dimensions shall be equal to that required for "rock" excavation (see specifications).

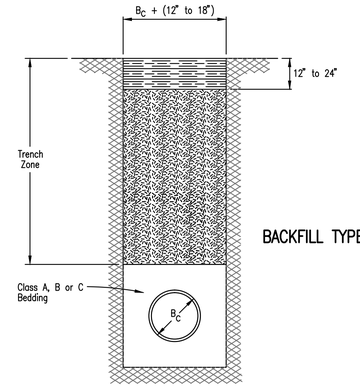

BACKFILL TYPE I

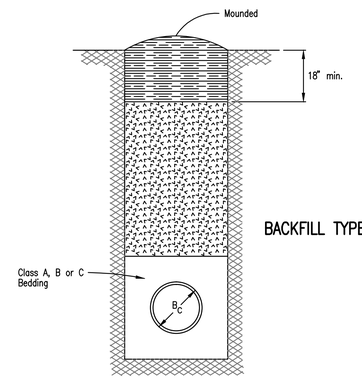

BACKFILL TYPE II

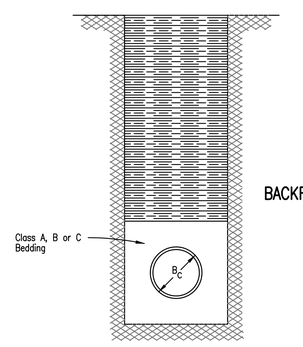

BACKFILL TYPE III

TRENCH ZONE BACKFILLING

B_C = Outside Pipe Diameter

= Compacted Granular Backfill

= Uncompacted Earth Backfill

= Compacted Earth Backfill

Compacted Granular Backfill material shall be an approved sand material free from debris, organic material and stones with 100% passing the 3/4" sieve and not more than 15% passing a No. 200 sieve; to be jetted and mechanically vibrated into place and compacted to 95% density as determined by ASTM D698.

Uncompacted Earth Backfill material may be natural soil free from large clods or stones, brush, roots more than 2 inches in diameter, debris, and junk. Flooding with water shall be provided as directed by the Engineer.

Compacted Earth Backfill shall consist of material existing prior to trenching or selected material as directed by the Engineer, and shall be compacted to 90% density as determined by ASTM D698.

Backfill: Backfill material and compaction requirements shall conform to either Type I, Type II or Type III as specified in the plans. One years maintenance will be required on all backfill.

Backfilling Through Rock: Backfilling through rock shall be performed as specified in the paragraph Backfill above, except that the Pipe Zone is increased to provide eighteen (18) inches of cover over the pipe. When approved by the Engineer the remainder of the backfill may be excavated rock provided the excavated rock has been broken up so that earth and rock will thoroughly mix and not result in voids around the larger pieces of rock. Any excess rock remaining after the trench has been backfilled shall be removed or wasted as directed by the Engineer.

Backfilling Under Pavement: Backfilling under existing or proposed pavement shall be performed as Backfill Type I to a level of two (2) feet from the bottom of the pavement. The remainder of the trench shall be backfilled with selected material, sufficiently damp to be properly compacted in layers not exceeding six (6) inches in depth, compaction shall be performed with mechanical tampers and continued until a relative density of 100 percent of standard density, in conformance with ASTM D698 is attained.

Backfilling Under Gravel Streets: Where the trench crosses or is in existing gravel surfaced streets, the backfill shall be compacted as provided in the paragraph "Backfilling Under Pavement".

NOTE: DRAWINGS AND SPECIFICATIONS ARE ORGANIZED FOR CONVENIENCE OF REFERENCE ONLY. THIS ORGANIZATION IS NOT INTENDED TO ESTABLISH THE SCOPE OF WORK OF ANY TRADE. THE WORK OF ANY GIVEN TRADE, SUPPLIER OR SUBCONTRACTOR MAY BE REPRESENTED IN DRAWINGS OR SPECIFICATION SECTIONS THAT CROSS OVER BETWEEN DESIGN DISCIPLINES AND MAY BE SHOWN ON OTHER DRAWINGS OR IN OTHER SPECIFICATION SECTIONS WITHIN THE CONTRACT DOCUMENTS. ESTABLISHING THE SCOPE OF ANY TRADE OR SUPPLIER IS THE RESPONSIBILITY OF THE CONTRACTOR. NEITHER THE OWNER NOR ARCHITECT WILL ESTABLISH THE LIMITS OR JURISDICTION OF ANY SUBCONTRACTOR.

GLMV Architecture
9229 Ward Parkway, Ste. 210
Kansas City, MO 64114
Tel: (816) 444-4200
www.glmv.com

PEC
PROFESSIONAL ENGINEERING CONSULTANTS, P.A.
104 SOUTH PINE PITTSBURG, KS 66762
620-235-0195 www.pec1.com
STATE CERT. OF AUTHORITY NO. 000465
PEC PROJECT # 14E14-000

STATE OF MISSOURI
BRIAN COOMES
02/12/2016
NUMBER PE-2015019306
PROFESSIONAL ENGINEER

CONSTRUCTION DOCUMENTS

© 2016 GLMV Architecture, Inc.
All work herein is the exclusive property of GLMV Architecture, Inc. and is not to be copied or used in any way without the express written consent of GLMV Architecture, Inc. All drawings, specification, ideas, designs and arrangements appearing herein constitute the original and unpublished Work of: GLMV Architecture, Inc.

JOPLIN PUBLIC SAFETY TRAINING FACILITY

5102 SWEDE LANE, JOPLIN, MO

MARK	DATE	DESCRIPTION

BEDDING & BACKFILL DETAILS (WATER, SANITARY, AND STORM)

JOB NO.	13061.000
DATE	02-12-2016
DRAWN	BMC
CHECKED	BDR

C116

DWG. 21 OF 141

CONSTRUCTION DOCUMENTS

Saved 01-25-2016 3:01:09 PM by BMC
Plot Scale 1:1 02-12-2016 10:18:37 AM by BRIAN COOMES
U:\Pittsburg\2014\14E14\000\Mun\Drawings\Plan Set\14E14-000_C-116_ Backfill Details